HOCHSCHULE OSNABRÜCK
UNIVERSITY OF APPLIED SCIENCES

INDIVIDUAL VS. INTEGRATED OPTIMIZATION OF INDUSTRIAL ENERGY SUPPLY WITH 100 % RES

PROJECT „REGIO PLUS“ – HOCHSCHULE OSNABRÜCK

JONAS BAARS & TIM WAWER

MOTIVATION

Decarbonization of the industrial sector

HOCHSCHULE OSNABRÜCK
UNIVERSITY OF APPLIED SCIENCES

System : LK Emsland

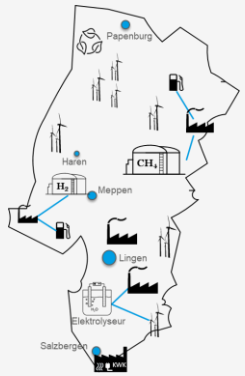

- Industrial electricity consumption **78%** of total demand
- 114% RES production to consumption ratio

100% substitution of fossil energy sources

natural gas

fuels

crude oil

electricity from renewable energies

+

green hydrogen

Interactions between industry and energy system

- Research topics
  - Role of industry as consumer, prosumer and flexibility provider in the energy transition
  - Evaluation of fossil fuel substitution pathways: locally or in the energy system

ENERGY SYSTEM AT FIRM AND SYSTEM LEVEL

HOCHSCHULE OSNABRÜCK
UNIVERSITY OF APPLIED SCIENCES

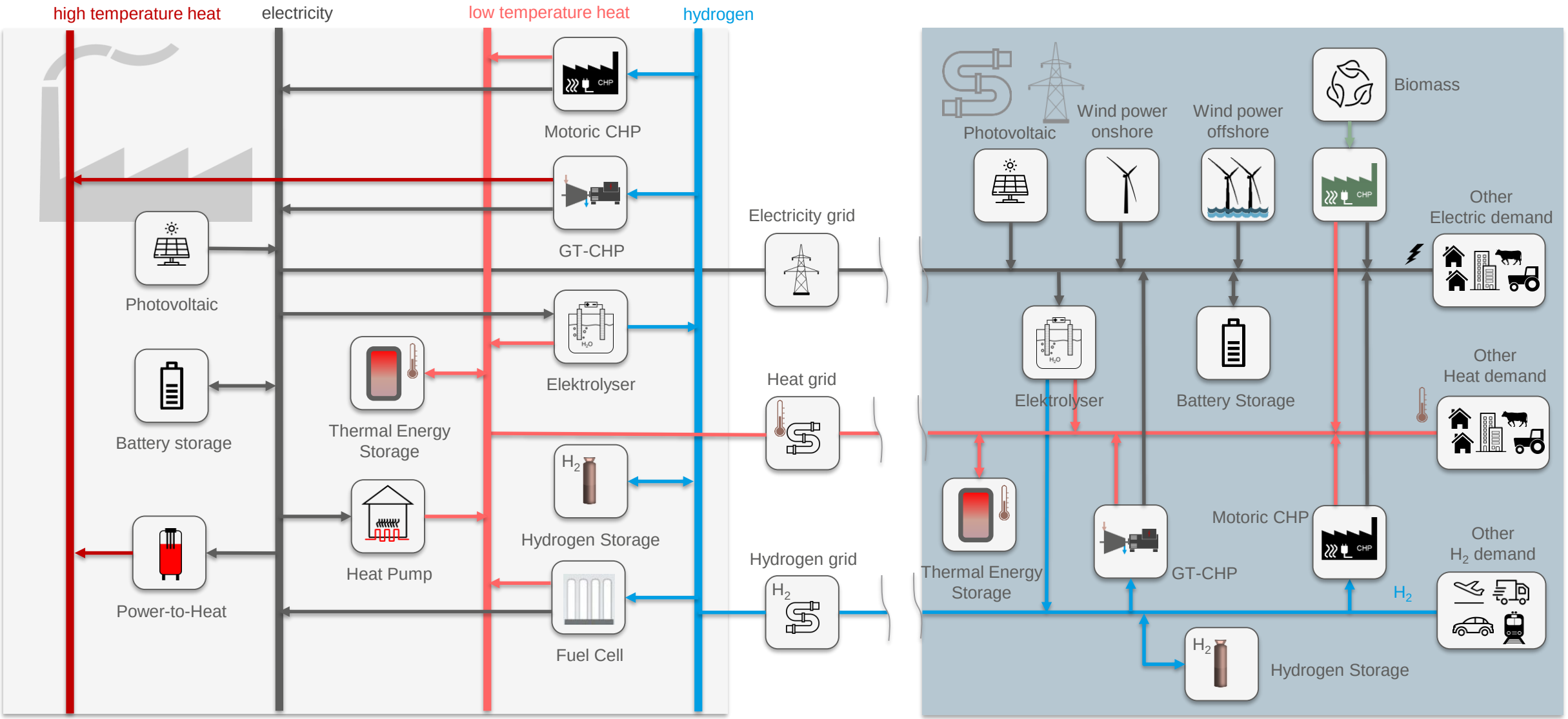

FIRM MODEL IMPLEMENTATION IN OEMOF

HOCHSCHULE OSNABRÜCK
UNIVERSITY OF APPLIED SCIENCES

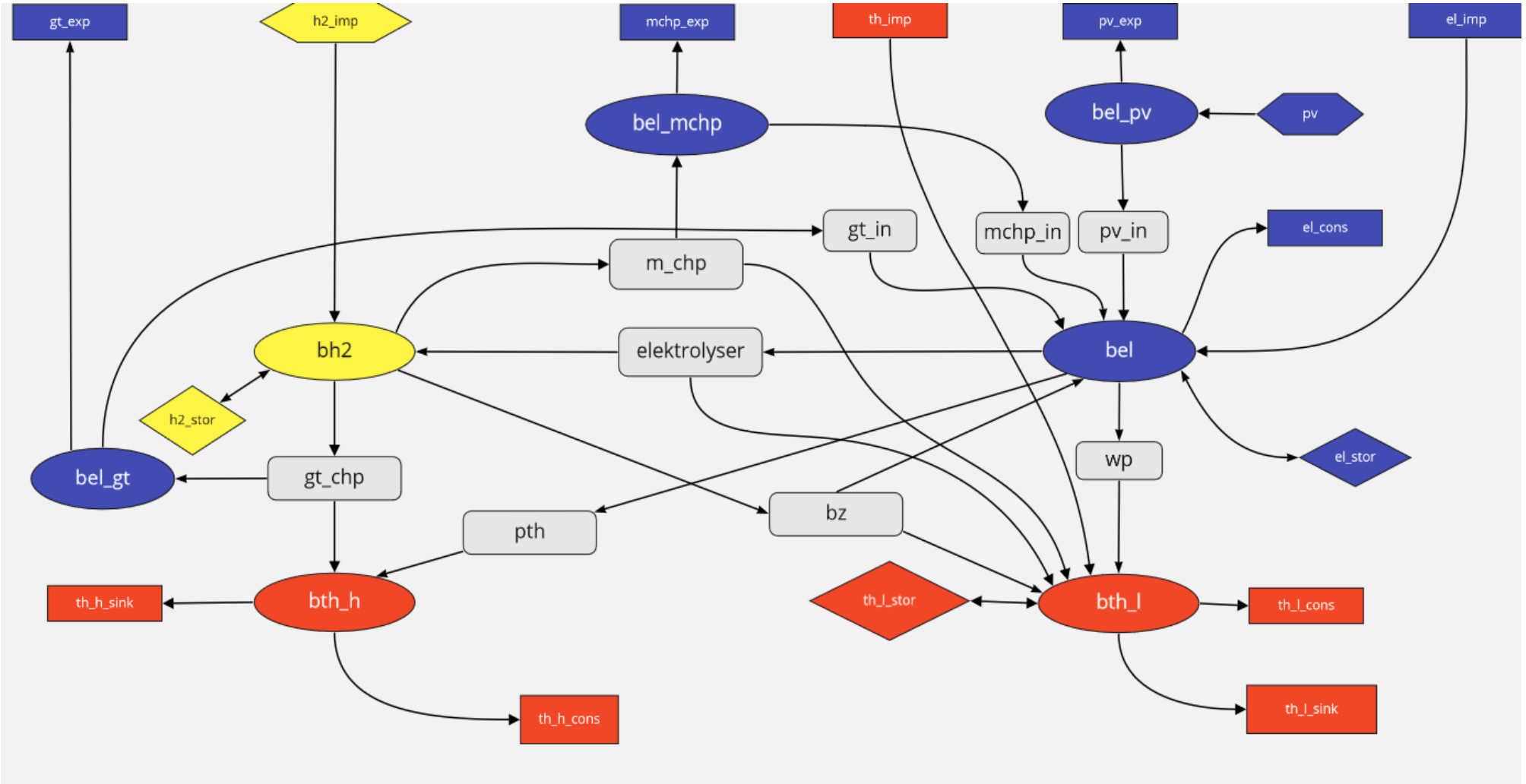

IDEA AND CURRENT ISSUES

HOCHSCHULE OSNABRÜCK
UNIVERSITY OF APPLIED SCIENCES

Individual firm optimization

System optimization with industrial demand, without flexibility

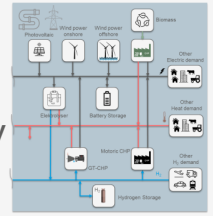

$$price_{dyn}(t) = price_{fix} + \frac{RES_{gen}(t)}{EL_{demand}(t)} \cdot \text{const}$$

Optimized behavior of “typical” industrial companies

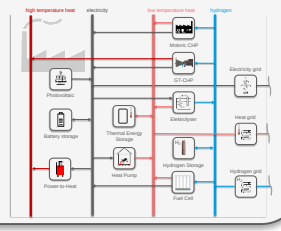

?

Integrated optimization

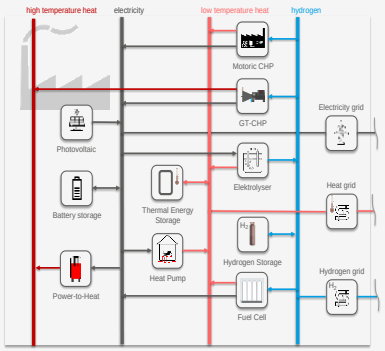

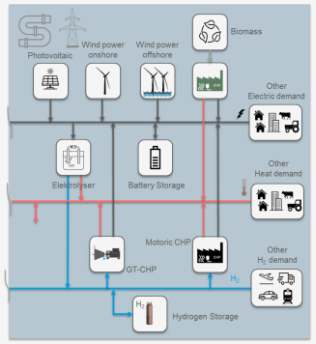

Investment in infrastructure currently missing

- Current issues
  - How to model the feedback from individual decisions to system (simultaneity factor).
  - Identifying shortfalls when comparing the results of the two approaches.
  - DSM not implemented